HTD-HW1W36F/LED Wall washer lamp

Product description：

HTD-HW1W36F was made by Aluminum shell, MCPCB, High power LED, Lens, pure copper wires (high temperature resistant,cold resistant,UV resistant), silicone glue and Toughened glass.

This product has high brightness,low power consumption,long life,low voltage,small attenuation,rich colors,etc. Can be achieve effect of flowing water,chase,scanning,etc.Depending on the installation,it was a composition change different color characters, design, etc. Various kinds of dynamic effect.

Widely used in hotel and other building outline and wall washer effect, can be do indoor or outdoor decorative lighting,etc.

*Tips:

When we computing power should retain 15-20% of the allowance(If input choose DC24V).

Prohibited surpass 10-15pcs per series to use in one parallel.

If 20-30pcs a string to connect kindly ensure that both ends connect DC24V power,achieve the best use effect.

Usually no more than 6 meters about the wiring length for Main line or each series of wall washer lamp.

Product figure：

HTD-HW1W36F Wall washer

DMX/IR/RF Project distance 5-10 meters

Optical properties：

No.	Color	LED quantity	lm/1LED	nm	LED Type	Efficiency	Optional
HTD-HW1W36F	Red	36	30	619-635	Single 1W	⩾0.82	Inout: DC24V/AC85-240V Color type: Single color/RGB Lens: 8/15/30/45/60/90/120° Control type: Constant lighting/IF/RF/DMX Protection grade: IP44/IP65
	Green		70	512-528			
	Blue		50	463-475			
	Yellow		60	587-595			
	W/WW		100	2000-20000K			

HTD-HW1W36F/LED Wall washer lamp
Product size chart (Unit:mm)

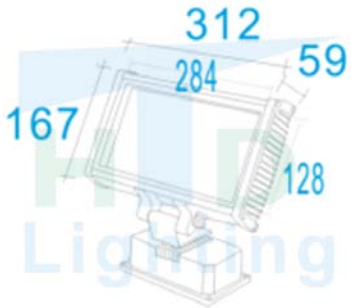

Basic parameter：		
Item	Parameter	Unit
Working voltage	DC24/AC85-240	V
Working power	36±3.6W(Can be make single 3W)	W
Operating Temperature	-40 ~60	℃
IP level	IP44/IP65	IP
Appearance size	L312*W167*H55(Not including holder)	mm
Control type	Constant lighting/IF/RF/DMX	*
Color type	Single color/R G B	*
Shine Angle for PC lens	8/15/30/45/60/90/120°	Can custom
Light source life	⩾50000	Hrs
Note：		
1.Above dimensions are given in mm;		
2.The above dimensions tolerance which is 1mm, unless otherwise specified.		
Connection mode (see below)		

*LED Wall washer lamp wiring diagram

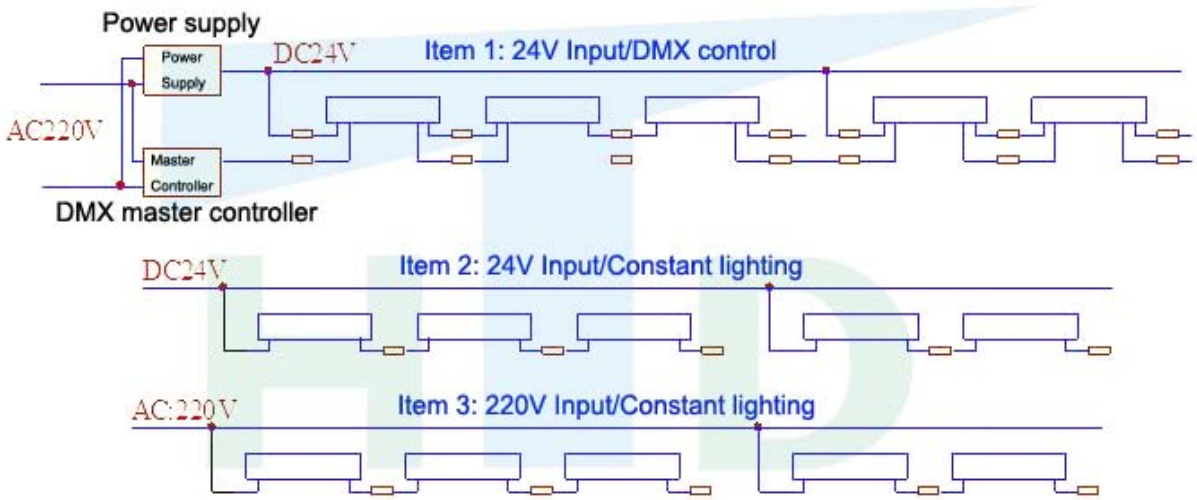

*Note:

1. One DMX master controller just can be control 170pcs wall washer lamps, and each 30pcs need connect one repeater(Amplifier); AC220V input model is same with 24V the wiring. DMX wall washer need each lamp have a address code.
2. RF or IR control model usually used for 1PCS wall washer lamp to control.
3. Must be in strict accordance with the local electrical wire standard choice, it is strictly prohibited to charged operation.

HTD-HW1W36F/LED Wall washer lamp

Lamp aging and shipment

Package info (Just reference)	LED wall washer lamp HTD-HW1W36F 2.3kg/PCS(IP65) Packing Wooden case size: 65CM*65CM*55CM/33KG/10PCS

*LED wall washer lamp-Package diagram

PS:Save a tree.Kindly don't print this document unless it's really necessary.

HTD-HW1W36F/LED Wall washer lamp
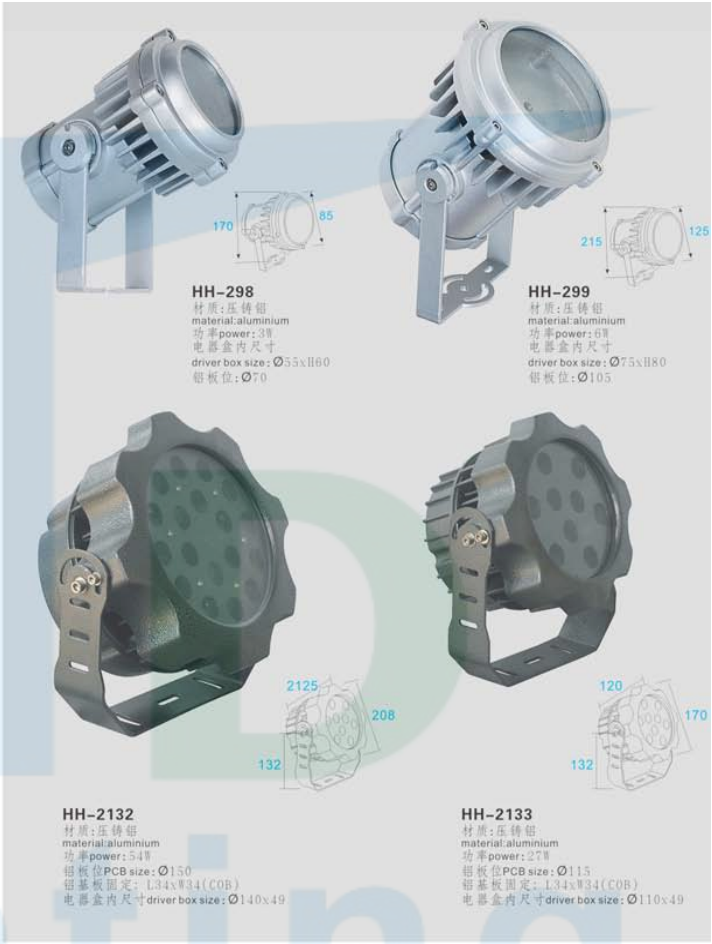
Other similar style diagrams